ZONE	REV	DESCRIPTION	DATE	APPD.
4				
3				
2				
1				

Specification
1.Rating 50mA 12V
2.Contact resistance: 200mΩ
3.Operating life: 300,000cycles
4.Operating Force: 1st=100±30gf 2nd=260±50gf
5.With guide pin,Metal cap is Ag-plated
6.RoHS compliant

RoHS Compatible

發行 2014.03.17 達立

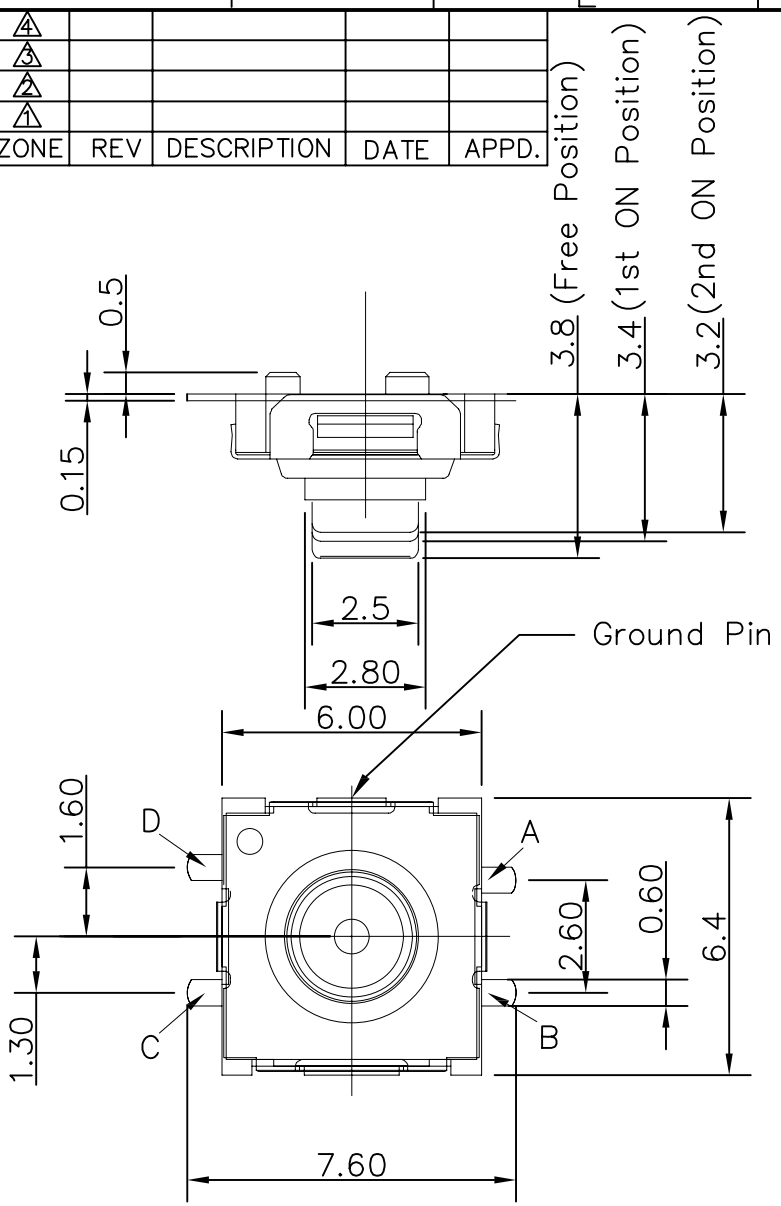

CIRCUIT DIAGREM

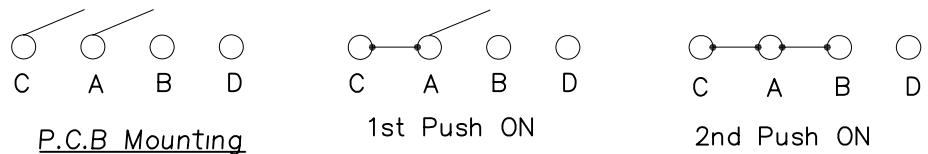

1st Push ON

2nd Push ON

P.C.B Mounting pattern Dimension (1:2)

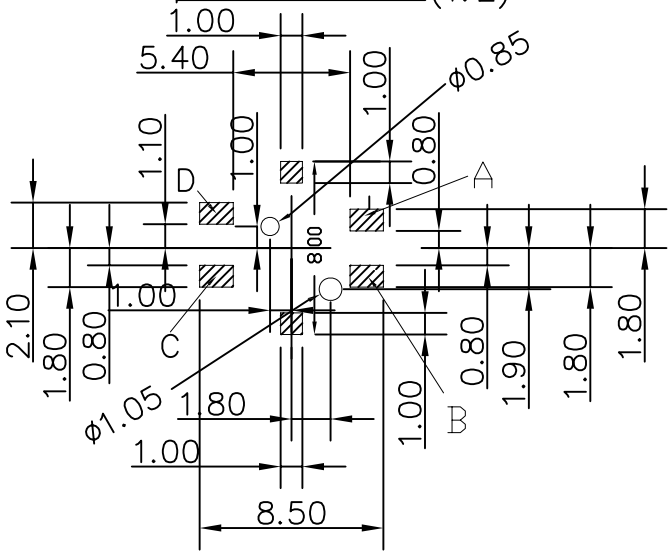

NO	Part Name	Material	Q"ty	Finishing
5	Cover	Bronze Phosphor	1	Ag Plate
4	Button	PA9T	1	
3	Dome	SUS301	2	Au Plate
2	Terminal	Bronze Phosphor	1	Ag Plate
1	Body	PA9T	1	

達立科技股份有限公司
Dawning Precision Co.,Ltd.
TEL: 886-2-82271388 FAX: 886-2-82272198

DESIGN	Sean	SCALE	
DRAWING	Sean	UNIT	mm
CHECK	Sean	SIZE	A4: 210*297
APPROVAL	Eric	VERSION	01

TOLERANCE UNLESS OTHERWISE STATED(mm)
less than 10 ±0.3
10~30 ±0.4
30~100 ±0.5
ANGIE ±2°

PART NAME	TACT SWITCH
PART NO	TSD1A-E-260-T11-S004
DRAWING NO	
DATE	2013/11/13